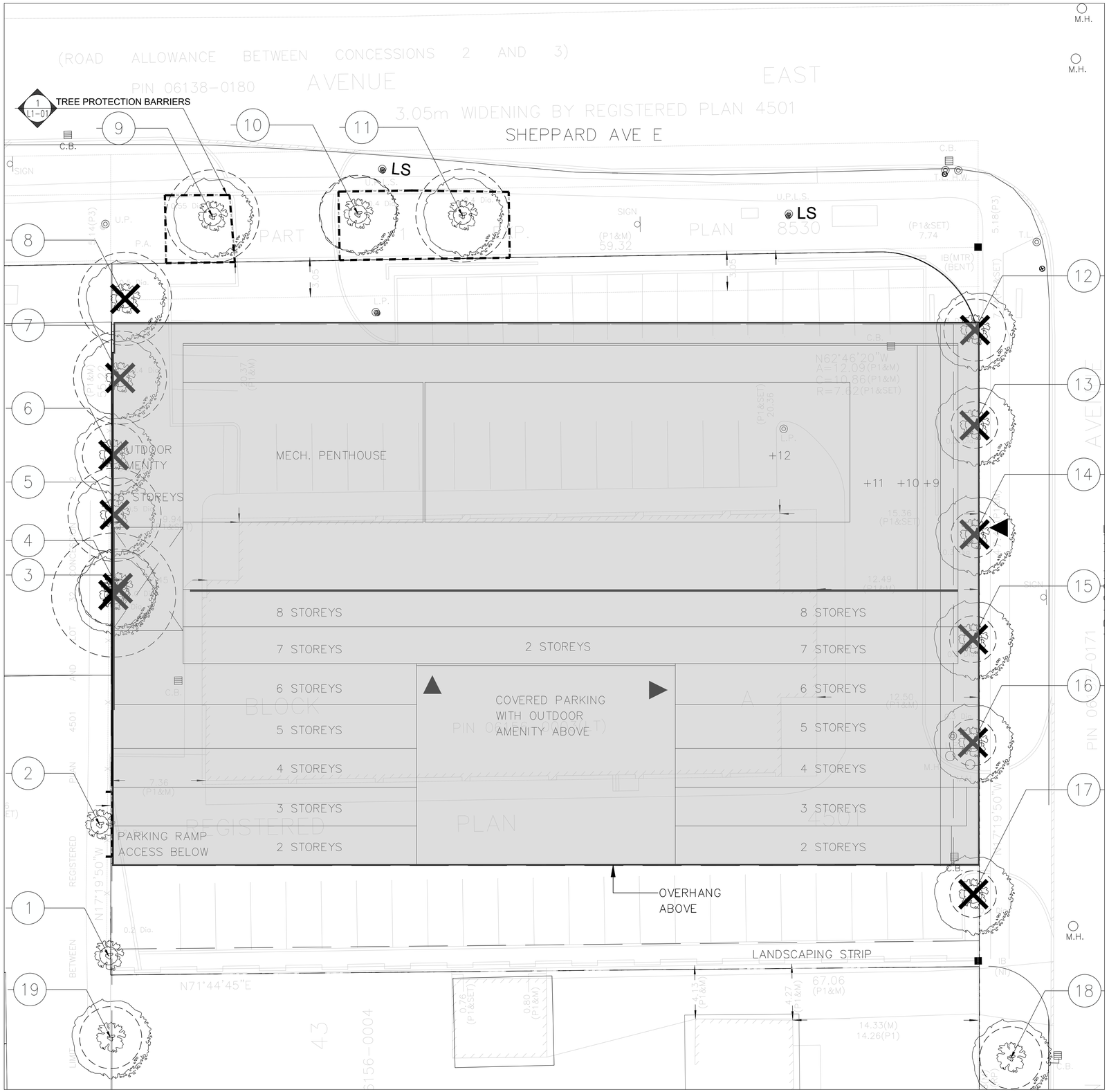


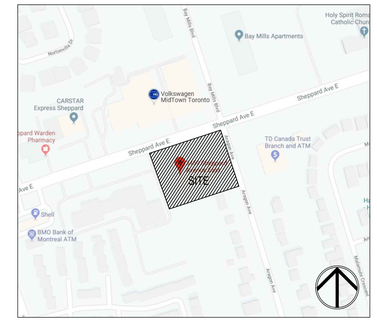


Key Map

REFER TO PLAN FOR LOCATION

**TORONTO**

**TREE PROTECTION ZONE (TPZ)**

NO GRADE CHANGE, STORAGE OF MATERIALS OR EQUIPMENT IS PERMITTED WITHIN THIS TPZ. TREE PRESERVATION SHALL BE PRACTICED AT ALL TIMES WITHOUT THE WRITTEN AUTHORIZATION OF CITY OF TORONTO, URBAN FORESTRY SERVICES.

FOR INFORMATION CALL URBAN FORESTRY SERVICES AT (416) 338-TREE (8733)

TREE PROTECTION SIGNAGE (SEC. 4)

A SIGN THAT IS SIMILAR TO THE ILLUSTRATION ABOVE MUST BE MOUNTED ON ALL SIDES OF A TREE PROTECTION ZONE. THE SIGN SHOULD BE A MINIMUM 02 BOOM X BOOM AND MADE OF WHITE GATOR BOARD OR EQUIVALENT MATERIAL.

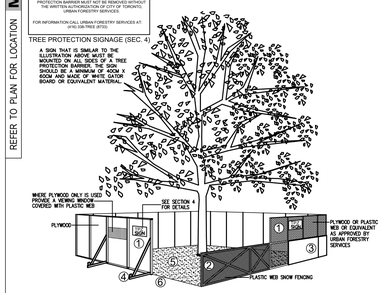


TREE PROTECTION BARRIERS

1. TREE PROTECTION BARRIERS MUST BE A PLYWOOD OR PLASTIC MESH HOARDING OR EQUIVALENT AS APPROVED BY URBAN FORESTRY.
2. TREE PROTECTION BARRIERS FOR TREES SITUATED ON THE CITY ROAD ALLOWANCE WHERE VISIBILITY MUST BE MAINTAINED CAN BE 1.2M (4FT.) HIGH AND CONSIST OF ORANGE PLASTIC MESH SNOW FENCING ON A WOOD FRAME MADE OF 2" x 4"s.
3. WHERE PLYWOOD, EXCAVATED SOIL WILL HAVE TO BE TEMPORARILY LOCATED NEAR A TREE PROTECTION BARRIER, PLYWOOD MUST BE USED TO ENSURE THAT NO DAMAGE TO THE TREE PROTECTED.
4. ALL SUPPORTS AND BRACING SHOULD BE OUTSIDE THE TREE PROTECTION ZONE. ALL SUCH SUPPORTS SHOULD MINIMIZE DAMAGING ROOTS OUTSIDE THE TREE PROTECTION BARRIER.
5. NO CONSTRUCTION ACTIVITY, GRADE CHANGES, SURFACE TREATMENT OR EXCAVATIONS OF ANY KIND IS PERMITTED WITHIN THE TREE PROTECTION ZONE.
6. SEDIMENT CONTROL FENCING SHALL BE INSTALLED IN LOCATIONS INDICATED IN AN URBAN FORESTRY APPROVED TREE PROTECTION PLAN. THE SEDIMENT CONTROL FENCING MUST BE INSTALLED TO ONTARIO PROVINCIAL STANDARDS (OPSD-219.110) AND TO THE SATISFACTION OF URBAN FORESTRY.

CITY OF TORONTO– URBAN FORESTRY SERVICES, PARKS AND RECREATION DIVISION (DETAIL TP-1)

## TREE PROTECTION BARRIERS DETAIL TYP.

1 L1-01

SCALE: N.T.S. CITY OF TORONTO – URBAN FORESTRY SERVICE (DETAIL TP-1)

## Legend

- Existing Deciduous Tree to Remain
- Existing Coniferous Tree to Remain
- Existing Deciduous Tree to be Removed
- Existing Coniferous Tree to be Removed
- Tree Protection Zone (TPZ)
- Property Line
- TPF — Tree Protection Fencing
- AAA L-2 — Detail Reference Key
- 10 — Existing Tree Reference Key

## Existing tree schedule

| No: | Tree Species | DBH (cm) | CR | TC | TPZ Radius (m) | Comments | Recommendations |
|---|---|---|---|---|---|---|---|
| #1 | Manitoba maple | 0 | 0 | 2 | 0 | Tree with multiple stems at 0 m | Removed by neighbouring development |
| #2 | cottonwood | 0 | 0 | 2 | 0 | Tree with multiple stems at 0 m | Removed by neighbouring development |
| #3 | cottonwood | 78 | 40 | 1 | 4.8 | Pollard topped at 6-7 m | To Be Removed |
| #4 | cottonwood | 48 | 40 | 1 | 3 | Pollard topped at 6-7 m | To Be Removed |
| #5 | cottonwood | 56 | 0 | 1 | 3.6 | Stump 5 m tall | To Be Removed |
| #6 | cottonwood | 35 | 50 | 1 | 2.4 | Pollard topped at 3 m | To Be Removed |
| #7 | cottonwood | 55 | 0 | 1 | 3.6 | Stump 5 m tall | To Be Removed |
| #8 | cottonwood | 54 | 50 | 1 | 3.6 | Pollard topped at 6-7 m | To Be Removed |
| #9 | silver maple | 52 | 55 | 5 | 3.6 | Roadside tree bifurcate at 3 m | To Be PRESERVED |
| #10 | silver maple | 44 | 60 | 5 | 3 | Roadside tree crown base at 4 m | To Be PRESERVED |
| #11 | silver maple | 56 | 55 | 5 | 3.6 | Roadside tree bifurcate at 3.5 m | To Be PRESERVED |
| #12 | silver maple | 34 | 60 | 5 | 2.4 | Roadside tree bifurcate at 3 m | To Be Removed |
| #13 | silver maple | 28 | 55 | 5 | 1.8 | Roadside tree bifurcate at 3 m | To Be Removed |
| #14 | silver maple | 27 | 50 | 5 | 1.8 | included branch, bifurcate at 2 m | To Be Removed |
| #15 | silver maple | 27 | 55 | 5 | 1.8 | Roadside tree bifurcate at 3 m | To Be Removed |
| #16 | silver maple | 26 | 60 | 5 | 1.8 | Roadside tree trifurcate at 2 m | To Be Removed |
| #17 | silver maple | 26 | 50 | 5 | 1.8 | at 0 to 2 m, and bifurcate at 2.5 m | To Be Removed |
| #18 | juniper | 35 | 55 | 5 | 2.4 | roadside tree with thin foliage | To Remain |
| #19 | pine, dead | 35 | 0 | 2 | 2.4 | Dead neighbour's pine tree | To Remain |


msla
MARTON SMITH LANDSCAPE ARCHITECTS
170 The Donway W Suite 206.
Toronto, Ontario, Canada. M3C 2G3
tel. 416.492.9966 | email. info@msla.ca


Architect:

SvN

Client/Owner:

Municipality:

TORONTO

Notes:

| No. | Revision | Date |
|---|---|---|
| 01 | Issued for Review | 07/01/20 |

North:

Stamp:

ASSOCIATION OF LANDSCAPE ARCHITECTS ONTARIO
OALA
MEMBER

Project:

**Proposed Mixed Use 12 storey Building**
3458 - 3471 Sheppard Avenue East
Toronto, Ontario

Scale: **1:150** Date: **January 2020**

Drawn By: **J.B.** Checked By: **L.M.**

Drawing Title:

# Tree Preservation & Removals Plan

Project No. **20106** Sheet No. **L1-01**


All information contained in these plans shall be checked by the contractor. All discrepancies shall be reported to the Landscape Architect (L.A.) before commencing with construction. All drawings have copyright and shall remain the property of the Landscape Architect. Copying or any reproduction in part or whole shall only be permitted with written consent of L. A. Drawings shall not be used for construction unless sealed & SIGNED.
All drainage patterns must clear positively away from buildings or structures at 2% min. The position of existing above ground and underground utilities and facilities are not necessarily shown on the drawings, and where shown, the accuracy of the position of utilities or facilities is not guaranteed. Before starting work, the contractor shall confirm the exact location of all existing utilities and facilities, and shall assume liability for damages.
NOTE: DIMENSIONS TAKE PRECEDENCE OVER SCALE. DO NOT SCALE DRAWINGS. ● ALL PLANTING TO BE INSTALLED AS PER CITY OF TORONTO STANDARDS. ● ALL WORK TO COMPLY WITH THE ONTARIO BUILDING CODE AND ALL LOCAL BYLAWS. ● ALL PLANT MATERIAL TO BE CERTIFIED NO. 1 CONTAINER STOCK UNLESS OTHERWISE NOTED. ● ALL SOFT LANDSCAPE AREAS TO RECEIVE 150mm TOPSOIL. ● ALL SOD TO BE NO. 1 NURSERY SOD.
DO NOT SCALE DRAWINGS ● PRELIMINARY NOT FOR CONSTRUCTION ● THESE DRAWINGS ARE NOT TO BE USED FOR CONSTRUCTION UNTIL COUNTERSIGNED BY L. ARCHITECT ● SIGNED _____ DATE _____

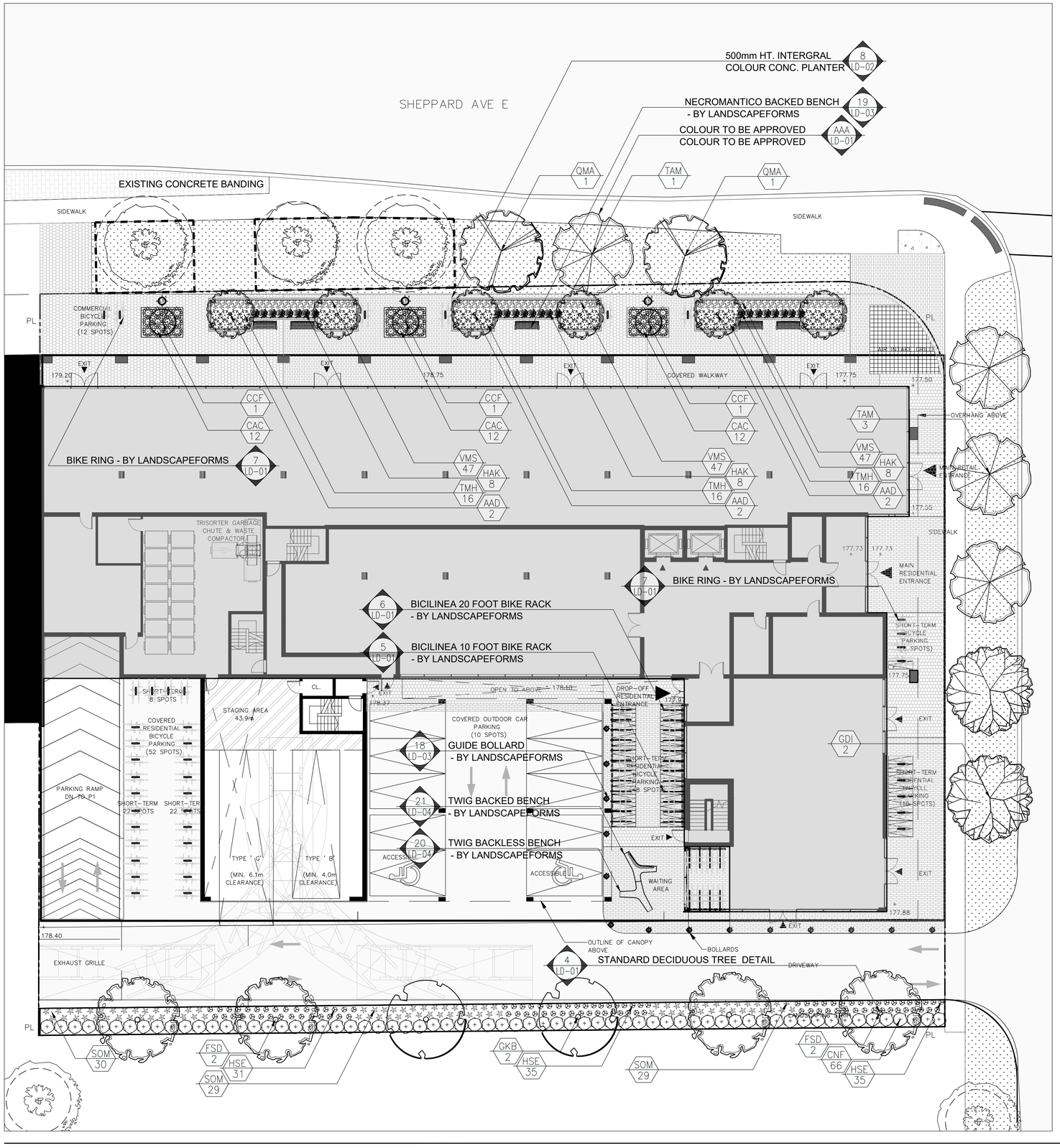


## Legend

- Proposed Deciduous Tree
- Proposed Coniferous Tree
- Proposed Ornamental Shrub
- Proposed Shrub/Perennial
- Prop. Sodded Area Typ.
- Prop. Concrete Paving Typ.
- Proposed Planting Area
- Prop. Unit Paving Type 1
- Prop. Unit Paving Type 2
- Light Bollard
- Light Standard
- Proposed Bike Ring
- Proposed Bench
- Plant Material Reference Key
- Property Line
- Detail Reference Key

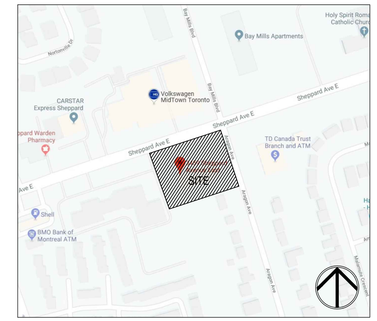


Key Map

### Urban Forestry Note:

All trees must be planted as per the plans, approved by Urban Forestry and must arrive on site in Balled and Burlapped condition, with a minimum caliper of 70mm (or as specified if larger). Each tree shall have the burlap and wire cage opened and soil brushed away until the first proper root is found indicating the top of the real root ball, the tree is then to be planted with this level to be considered the top of root-ball for all other instructions. Any tree found planted with the first proper root more than 2.5cm below planting level will be rejected and require replacement or replanting at the City's discretion

### Watering Note

- The Contractor shall be fully responsible to ensure that adequate water is provided to all plants from the point of installation until the date of acceptance. The contractor shall adjust the automatic irrigation system, if available, and shall apply additional water, using hoses as required.
- During the initial establishment period, and particularly immediately after installation do not rely on the irrigation system to water the plants. Plants will uptake water only within the root ball and a short distance outside the ball. It is possible to over water the soil while under watering the root ball with the irrigation system.
- Hand water root balls of all plants and the soil immediately around the root ball to assure that the root balls have adequate moisture. Test the moisture content in each root ball to determine the water content. Maintain root ball moisture and soil beyond the root ball moisture between 10 and 20% as measured using a General Digital Moisture Meter. Do not over water the soil around the plants. Use "Tree Gator Bags" to assist in watering trees.

### Suggested Plant Material List

| KEY | QNTY | BOTANICAL NAME | COMMON NAME | HTICAL | SPREAD | ROOT | DROUGHT TOLERANT | NATIVE | REMARKS |
|---|---|---|---|---|---|---|---|---|---|
| DECIDUOUS TREES | | | | | | | | | |
| FSD | 4 | Fagus sylvatica 'Dawyck Prurple' | Dawyck Purple Beech | 70 mm | | B.&B. | High | Yes | Full Form |
| GKB | 2 | Ginkgo biloba | Maidenhair Tree | 70 mm | | B.&B. | High | Yes | Full Form |
| GDI | 2 | Gymnocladus dioicus | Kentucky Coffee Tree | 70 mm | | B.&B. | High | Yes | Full Form |
| TAM | 4 | Tilia Americana | Basswood Linden | 70 mm | | B.&B. | High | Yes | Full Form |
| QMA | 2 | Quercus macrocarpa | Bur Oak | 70 mm | | B.&B. | High | Yes | Full Form |
| DECIDUOUS SHRUBS | | | | | | | | | |
| AAO | 6 | Amelanclar arborea | Downy Serviceberry (tree form) | 300 cm | | B.&B. | High | Yes | Full form |
| CCF | 3 | Cercis canadensis 'Forest Pansy' | Eastern Red Bud "Purple foliage" (tree form) | 240 cm | pink/pur | B.&B. | High | Yes | Multi Stem |
| CNF | 66 | Cornus sericea 'Farrow' | Artic Fire Dogwood | 60 cm | | C.G. | High | Yes | Full Form |
| CONIFEROUS SHRUBS | | | | | | | | | |
| TMH | 48 | Taxus media 'Hillii' | Hill's Yew | 70 cm | | C.G. | High | Yes | Full Form |
| PERENNIALS | | | | | | | | | |
| HSE | 101 | Hosta sieboldiana elegans (Blue) | Elegans Large Blue Leaf Hosta | | shade | C.G. #1 | High | Yes | Large Leaf |
| SOM | 88 | Salvia officinalis 'Minimum' | Dwarf Sage | | | 2 Gal. | High | Yes | Full Form |
| VMS | 141 | Viola 'Mars' | Mars violet | | moove | C.G. #1 | High | Yes | Full Form |
| GRASSES: | | | | | | | | | |
| CAC | 36 | Calamagrostis acutiflora 'Karl Foerster' | Karl Foerster Feather Reed Grass | | | 5 Gal. | High | Yes | Full Form (PPOY Winner) |
| HAK | 24 | Hakonechloa macra "Aureola" | Japanese Forest Grass | | | 2 Gal. | High | Yes | Full Form (PPOY Winner) |


msla
MARTON SMITH LANDSCAPE ARCHITECTS
170 The Donway W Suite 206.
Toronto, Ontario, Canada. M3C 2G3
tel. 416.492.9966 | email. info@msla.ca


Architect:

SvN

Client/Owner:

Municipality:

TORONTO

Notes:

| No. | Revision | Date |
|---|---|---|
| 03 | Re Issued for ZBA submission | 06/23/20 |
| 02 | Issued for Review | 06/10/20 |
| 01 | Issued for ZBA submission | 02/19/20 |

North:

Stamp:

ONTARIO ASSOCIATION OF LANDSCAPE ARCHITECTS MEMBER

Project:

**Proposed Mixed Use 12 storey Building**
3458 - 3471 Sheppard Avenue East
Toronto, Ontario

Scale: **1:150** Date: **January 2020**

Drawn By: **J.B.** Checked By: **L.M.**

Drawing Title:

# Landscape Master Plan

Project No. **20106** Sheet No. **L2-01**


All information contained in these plans shall be checked by the contractor. All discrepancies shall be reported to the Landscape Architect (L.A.) before commencing with construction. All drawings have copyright and shall remain the property of the Landscape Architect. Copying or any reproduction in part or whole shall only be permitted with written consent of L. A. Drawings shall not be used for construction unless sealed & SIGNED. All drainage patterns must drain positively away from buildings or structures at 2% min. The position of existing above ground and underground utilities and facilities are not necessarily shown on the drawings, and where shown, the accuracy of the position of utilities or facilities is not guaranteed. Before starting work, the contractor shall confirm the exact location of all existing utilities and facilities, and shall assume liability for damages. NOTE: WORK WITHIN MUNICIPAL RIGHT-OF-WAYS MUST BE INSPECTED AND APPROVED BY THE MUNICIPAL ENGINEER PRIOR TO CONSTRUCTION. ● DO NOT SCALE DRAWINGS ● PRELIMINARY NOT FOR CONSTRUCTION ● THESE DRAWINGS ARE NOT TO BE USED FOR CONSTRUCTION UNTIL COUNTERSIGNED BY L. ARCHITECT ● SIGNED: _____ DATE: _____

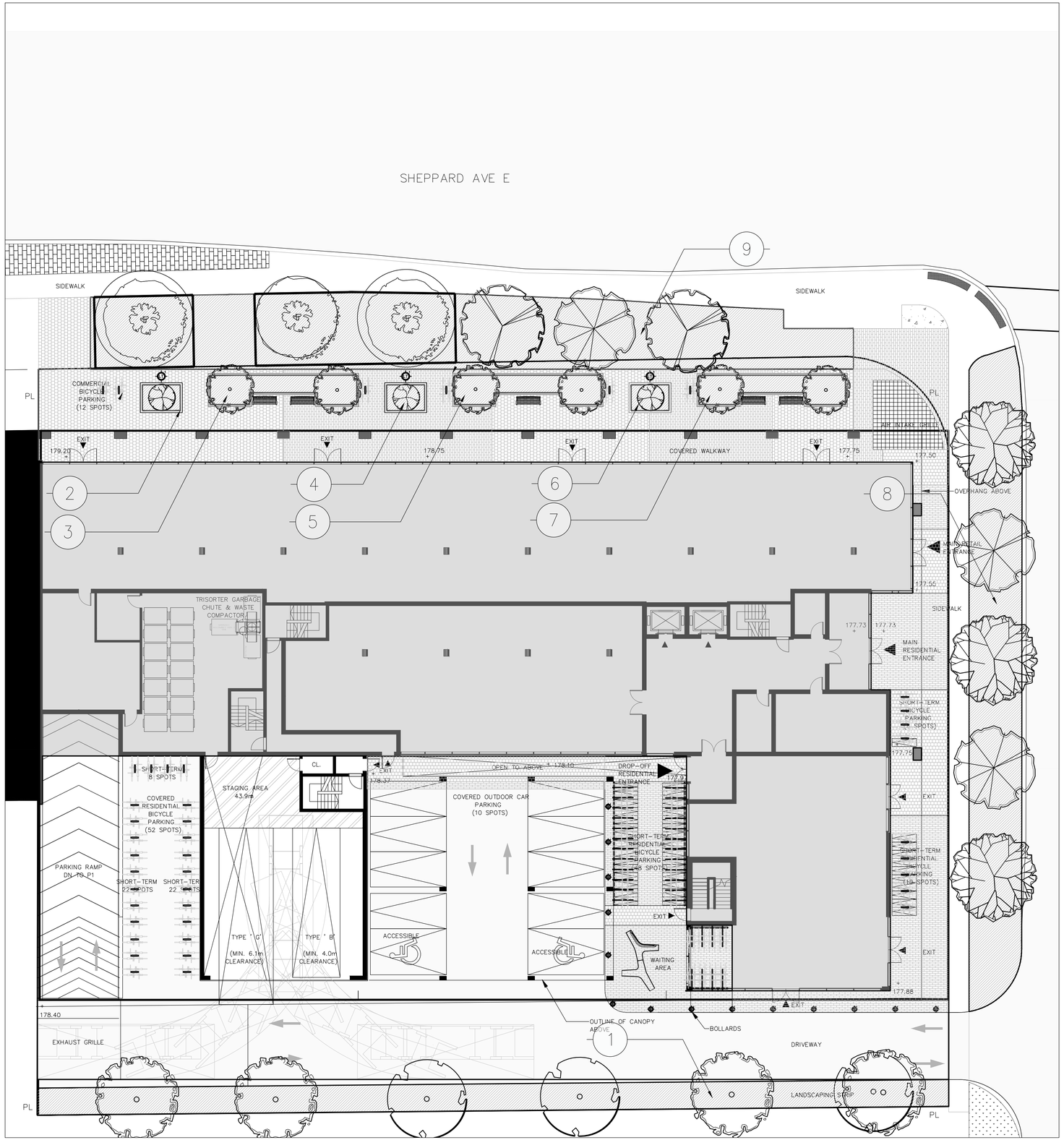


## Legend

- Proposed Deciduous Tree
- Proposed Coniferous Tree
- Proposed Ornamental Shrub
- Proposed Shrub/Perennial
- Prop. Sodded Area Typ.
- Prop. Concrete Paving Typ.
- Proposed Planting Area
- Plant Material Reference Key (AAA 0)
- Property Line
- Prop. Unit Paving
- Boundary of soil volume area
- Prop. soil volume area

## Soil Volume chart

| Soil area # | soil area (M2) | soil depth (M) | soil volume(M3) | Trees in area | Soil Volume Per tree | Irrigation Provided |
|---|---|---|---|---|---|---|
| 1 | 154.6 | 1.3 | 200.98 | 6 | 33.50 | No |
| 2 | 5.2 | 1.3 | 6.76 | 0 | N/A | No |
| 3 | 18.8 | 1.3 | 24.44 | 0 | N/A | No |
| 4 | 5.2 | 1.3 | 6.76 | 0 | N/A | No |
| 5 | 18.8 | 1.3 | 24.44 | 0 | N/A | No |
| 6 | 5.2 | 1.3 | 6.76 | 0 | N/A | No |
| 7 | 18.8 | 1.3 | 24.44 | 0 | N/A | No |
| 8 | 183.4 | 1.3 | 238.42 | 5 | 47.68 | No |
| 9 | 285 | 1.3 | 370.5 | 3 | 61.75 | No |

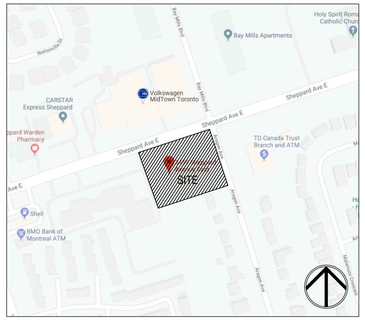


Key Map

msla
MARTON SMITH LANDSCAPE ARCHITECTS
170 The Donway W Suite 206.
Toronto, Ontario, Canada. M3C 2G3
tel. 416.492.9966 | email. info@msla.ca

Architect:

SvN

Client/Owner:

Municipality:

TORONTO

Notes:

| No. | Revision | Date |
|---|---|---|
| 03 | Re Issued for ZBA submission | 06/23/20 |
| 02 | Issued for Review | 06/10/20 |
| 01 | Issued for ZBA submission | 02/19/20 |

North:

Stamp: ONTARIO ASSOCIATION OF LANDSCAPE ARCHITECTS — OALA — MEMBER

Project:

**Proposed Mixed Use 12 storey Building**
3458 - 3471 Sheppard Avenue East
Toronto, Ontario

Scale: **1:150** Date: **January 2020**

Drawn By: **J.B.** Checked By: **L.M.**

Drawing Title:

# Soil Volume Plan

Project No. **20106** Sheet No. **L2-02**

All information contained in these plans shall be checked by the contractor. All discrepancies shall be reported to the Landscape Architect (L.A.) before commencing with construction. All drawings have copyright and shall remain the property of the Landscape Architect. Copying or any reproduction in part or whole shall only be permitted with written consent of L. A. Drawings shall not be used for construction unless sealed & SIGNED. All plant material shall be installed as per Ontario Landscape Architecture Specifications Manual (latest edition). Do not scale drawings. Verify all dimensions, levels and conditions on site before commencing work. Report any discrepancies to the Landscape Architect. The position of existing above ground utilities and underground services shown on the drawings are approximate only. Locates and protection of all utilities are the responsibility of the contractor. Failure to do so will make the contractor liable for any damages. All trees within and adjacent to the site shall be protected in accordance with the City of Toronto requirements. Protection shall be installed prior to any construction activity on the site and shall remain in place until all construction is completed. Trees to be removed shall be stumped and the site restored to a level condition free of any debris. Refer to the Arborist Report for tree protection specifications. DO NOT SCALE DRAWINGS • PRELIMINARY NOT FOR CONSTRUCTION • THESE DRAWINGS ARE NOT TO BE USED FOR CONSTRUCTION UNTIL COUNTERSIGNED BY L. ARCHITECT • SIGNED _____ DATE _____

## Legend

- Proposed Ornamental Shrub
- Proposed Shrub/Perennial
- Proposed Synthetic Shrub Screen
- Prop. Sodded Area Typ.
- Prop. Concrete Paving Typ.
- Prop. Unit Paving Type 1
- Prop. Unit Paving Type 2
- Proposed Sun Chair
- Proposed BBQ Feature
- Proposed Dining Table
- Proposed Lounge Seating
- Proposed Bench Seating
- Proposed Planter
- Proposed Counter
- Proposed Table
- Detail Reference Key (AAA 1-2)
- Plant Material Reference Key (AAA 0)

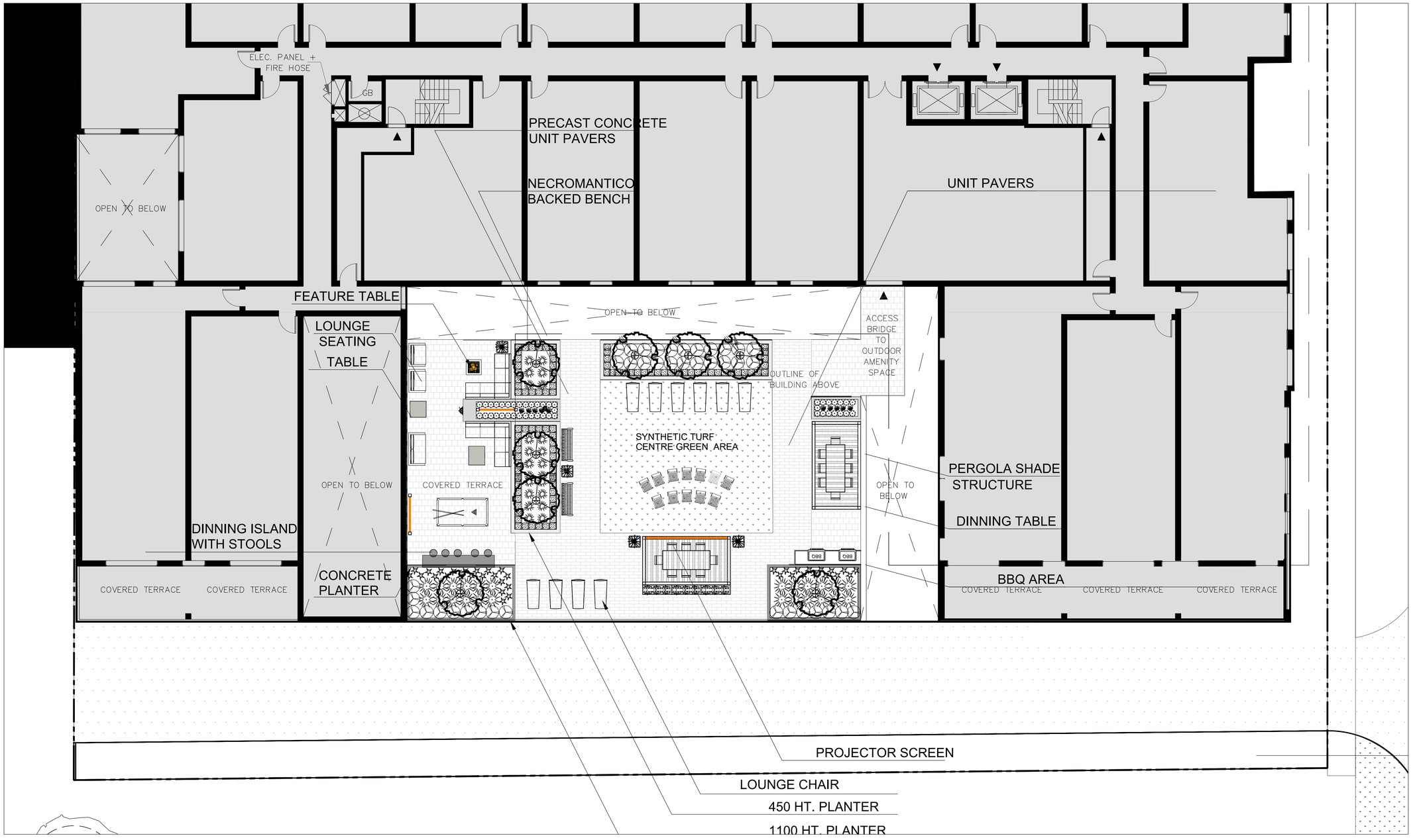



msla
MARTON SMITH LANDSCAPE ARCHITECTS
170 The Donway W Suite 206.
Toronto, Ontario, Canada. M3C 2G3
tel. 416.492.9966 | email. info@msla.ca


Architect:
SvN

Client/Owner:

Municipality:
TORONTO

Notes:

| No. | Revision | Date |
|---|---|---|
| 03 | Re Issued for ZBA submission | 06/23/20 |
| 02 | Issued for Review | 06/10/20 |
| 01 | Issued for ZBA submission | 02/19/20 |

North:

Stamp: ONTARIO ASSOCIATION OF LANDSCAPE ARCHITECTS — OALA — MEMBER

Project:
**Proposed Mixed Use 12 storey Building**
3458 - 3471 Sheppard Avenue East
Toronto, Ontario

Scale: **1:100** Date: **Jan 2020**

Drawn By: **J.B.** Checked By: **L.M.**

Drawing Title:
# Rooftop plan Floor 2

Project No. **20106** Sheet No. **L2-02**


All information contained in these plans shall be checked by the contractor. All discrepancies shall be reported to the Landscape Architect (L.A.) before commencing with construction. All drawings have copyright and shall remain the property of the Landscape Architect. Copying or any reproduction in part or whole shall only be permitted with written consent of L. A. Drawings shall not be used for construction unless sealed & SIGNED.
All drawings gather no exact dates (actually away from buildings or structures at 2% min.). The position of existing above ground and underground utilities and facilities are not necessarily shown on the drawings, and where shown, the accuracy of the location of utilities or facilities is not guaranteed. Before starting work, the contractor shall confirm the exact location of all existing utilities and facilities, and shall assume liability for damages.
NOTE: ALL WORK MUST BE APPROVED BY CONSULTANT & ENGINEER PRIOR TO CONSTRUCTION • ANY AND ALL REVISIONS MUST BE APPROVED BY CONSULTANT & ENGINEER PRIOR TO CONSTRUCTION • ANY AND ALL REVISIONS MUST BE SIGNED & DATED
DO NOT SCALE DRAWINGS • PRELIMINARY NOT FOR CONSTRUCTION • THESE DRAWINGS ARE NOT TO BE USED FOR CONSTRUCTION UNTIL COUNTERSIGNED BY L. ARCHITECT • SIGNED _____ DATE _____

## Legend

| | | | | | | | |
|---|---|---|---|---|---|---|---|
| | Proposed Ornamental Shrub | | Prop. Sodded Area Typ. | | Proposed Sun Chair | | Proposed Planter |
| | Proposed Shrub/Perennial | | Prop. Concrete Paving Typ. | | Proposed BBQ Feature | | Proposed Counter |
| | Proposed Synthetic Shrub Screen | | Prop. Unit Paving Type 1 | | Proposed Dining Table | | Proposed Table |
| | | | Prop. Unit Paving Type 2 | | Proposed Lounge Seating | AAA 1-2 | Detail Reference Key |
| | | | Proposed Green Roof Area | | Proposed Bench Seating | AAA 0 | Plant Material Reference Key |

msla
MARTON SMITH LANDSCAPE ARCHITECTS
170 The Donway W Suite 206.
Toronto, Ontario, Canada. M3C 2G3
tel. 416.492.9966 | email. info@msla.ca

Architect:
SvN

Client/Owner:

Municipality:
TORONTO

Notes:

| No. | Revision | Date |
|---|---|---|
| 03 | Re Issued for ZBA submission | 06/23/20 |
| 02 | Issued for Review | 06/10/20 |
| 01 | Issued for ZBA submission | 02/19/20 |

North:

Stamp:
ONTARIO ASSOCIATION OF LANDSCAPE ARCHITECTS
LOUIS R. MATSIS
OALA
MEMBER

Project:
**Proposed Mixed Use 12 storey Building**
3458 - 3471 Sheppard Avenue East
Toronto, Ontario

Scale: **1:100** Date: **Jan 2020**
Drawn By: **J.B.** Checked By: **L.M.**

Drawing Title:
# Rooftop plan Floor 7

Project No. **20106** Sheet No. **L2-03**

All information contained in these plans shall be checked by the contractor. All discrepancies shall be reported to the Landscape Architect (L.A.) before commencing with construction. All drawings have copyright and shall remain the property of the Landscape Architect. Copying or any reproduction in part or whole shall only be permitted with written consent of L. A. Drawings shall not be used for construction unless sealed & SIGNED.
All drainage patterns must drain positively away from buildings or structures at 2% min. The position of existing above ground and underground utilities and facilities are not necessarily shown in the drawings, and where shown, the accuracy of the position of utilities or facilities is not guaranteed. Before starting work, the contractor shall confirm the exact location of all existing utilities and facilities, and shall assume liability for damages.
NOTE: ALL WORK MUST BE CONSTRUCTED IN ACCORDANCE WITH THE ONTARIO BUILDING CODE. ALL DIMENSIONS TO BE CHECKED ON SITE BY CONTRACTOR & ARCHITECT. DATE _____
DO NOT SCALE DRAWINGS ● PRELIMINARY NOT FOR CONSTRUCTION ● THESE DRAWINGS ARE NOT TO BE USED FOR CONSTRUCTION UNTIL COUNTERSIGNED BY L. ARCHITECT ● SIGNED _____

**Legend**

| | |
|---|---|
| Prop. Sodded Area Typ. | |
| Prop. Concrete Paving Typ. | |
| Prop. Unit Paving Type 1 | |
| Prop. Unit Paving Type 2 | |
| Proposed Green Roof Area | |
| Proposed Privacy screen | |
| AAA L-2 | Detail Reference Key |
| AAA 0 | Plant Material Reference Key |

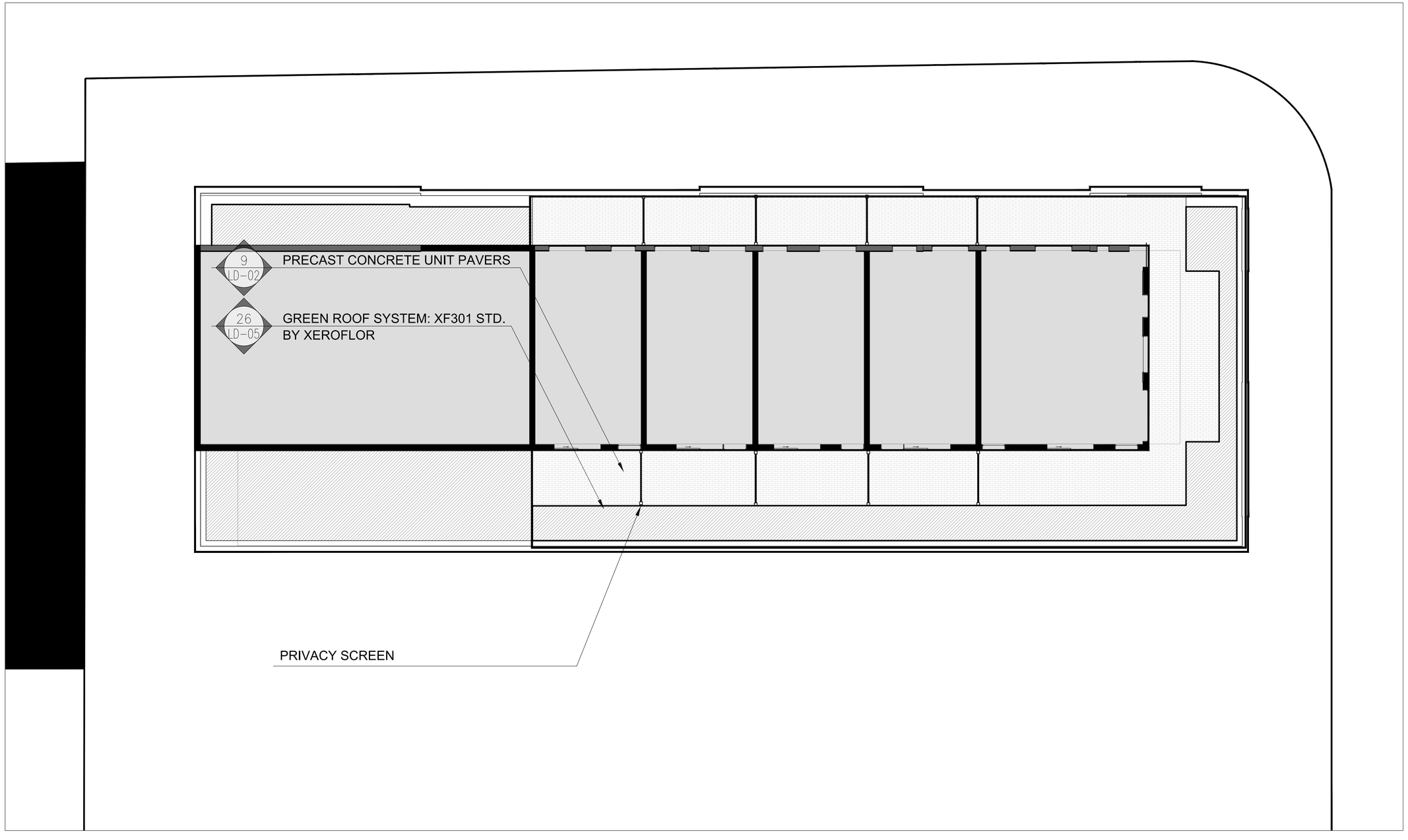



msla
MARTON SMITH LANDSCAPE ARCHITECTS
170 The Donway W Suite 206.
Toronto, Ontario, Canada. M3C 2G3
tel. 416.492.9966 | email. info@msla.ca


Architect:

SvN

Client/Owner:

Municipality:

TORONTO

Notes:

| No. | Revision | Date |
|---|---|---|
| 03 | Re Issued for ZBA submission | 06/23/20 |
| 02 | Issued for Review | 06/10/20 |
| 01 | Issued for ZBA submission | 02/19/20 |

North:

Stamp:

ASSOCIATION OF LANDSCAPE ARCHITECTS ONTARIO MEMBER OALA

Project:

**Proposed Mixed Use 12 storey Building**
3458 - 3471 Sheppard Avenue East
Toronto, Ontario

Scale: **1:100** Date: **Jan 2020**

Drawn By: **J.B.** Checked By: **L.M.**

Drawing Title:

# Rooftop plan Floor 12

Project No. **20106**

Sheet No. **L2-04**


All information contained in these plans shall be checked by the contractor. All discrepancies shall be reported to the Landscape Architect (L.A.) before commencing with construction. All drawings have copyright and shall remain the property of the Landscape Architect. Copying or any reproduction in part or whole shall only be permitted with written consent of L. A. Drawings shall not be used for construction unless sealed & SIGNED.
All drainage patterns must clear positively away from buildings or structures at 2% min. The position of existing above ground and underground utilities and facilities are not necessarily shown on the drawings, and where shown, the accuracy of the position of utilities or facilities is not guaranteed. Before starting work, the contractor shall confirm the exact location of all existing utilities and facilities, and shall assume liability for damages.
ALL WORK SHALL BE CARRIED OUT IN ACCORDANCE WITH THE LATEST EDITION OF THE ONTARIO PROVINCIAL STANDARDS, AND THE CONTRACT DOCUMENTS ♦ ALL WORK SHALL BE CARRIED OUT IN ACCORDANCE WITH THE ONTARIO BUILDING CODE AND ALL THE LOCAL BYLAWS ♦ ALL WORK SHALL MEET OR EXCEED THE CURRENT ONTARIO OCCUPATIONAL HEALTH AND SAFETY ACT
DO NOT SCALE DRAWINGS ♦ PRELIMINARY NOT FOR CONSTRUCTION ♦ THESE DRAWINGS ARE NOT TO BE USED FOR CONSTRUCTION UNTIL COUNTERSIGNED BY L. ARCHITECT ♦ SIGNED _____ DATE _____

## Legend

| | | | | | |
|---|---|---|---|---|---|
| | Prop. Sodded Area Typ. | | Prop. Unit Paving Type 1 | AAA L-2 | Detail Reference Key |
| | Prop. Concrete Paving Typ. | | Prop. Unit Paving Type 2 | AAA 0 | Plant Material Reference Key |
| | | | Proposed Green Roof Area | | |

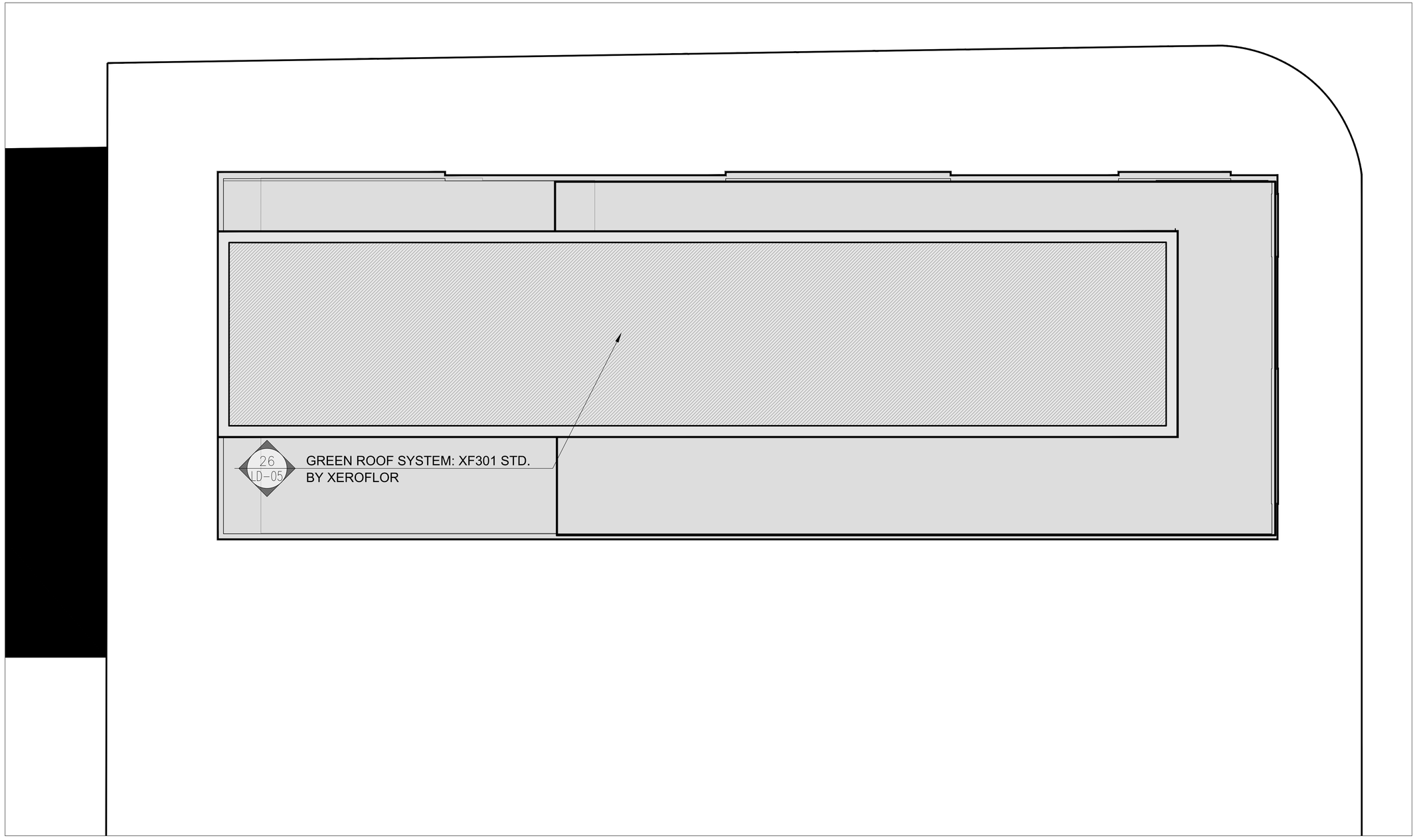



msla
MARTON SMITH LANDSCAPE ARCHITECTS
170 The Donway W Suite 206.
Toronto, Ontario, Canada. M3C 2G3
tel. 416.492.9966 | email. info@msla.ca


Architect:

SvN

Client/Owner:

Municipality:

TORONTO

Notes:

| No. | Revision | Date |
|---|---|---|
| 03 | Re Issued for ZBA submission | 06/23/20 |
| 02 | Issued for Review | 06/10/20 |
| 01 | Issued for ZBA submission | 02/19/20 |

North:

Stamp:

ONTARIO ASSOCIATION OF LANDSCAPE ARCHITECTS
MARTON SMITH
OALA
MEMBER

Project:

**Proposed Mixed Use 12 storey Building**
3458 - 3471 Sheppard Avenue East
Toronto, Ontario

Scale: **1:100** Date: **Jan 2020**

Drawn By: **J.B.** Checked By: **L.M.**

Drawing Title:

**Rooftop plan**

Project No. **20106** Sheet No. **L2-05**


All information contained in these plans shall be checked by the contractor. All discrepancies shall be reported to the Landscape Architect (L.A.) before commencing with construction. All drawings have copyright and shall remain the property of the Landscape Architect. Copying or any reproduction in part or whole shall only be permitted with written consent of L. A. Drawings shall not be used for construction unless sealed & SIGNED.
All drainage patterns must drain positively away from buildings or structures at 2% min. The position of existing above ground and underground utilities are facilities are not necessarily shown in this drawings, and where shown, the accuracy of the position of utilities or facilities is not guaranteed. Before starting work, the contractor shall confirm the exact location of all existing utilities and facilities, and shall assume liability for damages.
NOTE: PRIVATE AND PUBLIC UTILITIES AND SERVICES ARE NOT SHOWN ON THIS PLAN. THE CONTRACTOR MUST CONFIRM THE LOCATION OF ALL UTILITIES AND SERVICES PRIOR TO CONSTRUCTION.
DO NOT SCALE DRAWINGS ● PRELIMINARY NOT FOR CONSTRUCTION ● THESE DRAWINGS ARE NOT TO BE USED FOR CONSTRUCTION UNTIL COUNTERSIGNED BY L. ARCHITECT ● SIGNED _____ DATE _____

REFER TO PLAN FOR LOCATION

LANDSCAPE SPECIFICATIONS

CONTRACTOR MUST CONTACT ALL UTILITY COMPANIES FOR STAKE OUTS PRIOR TO ANY EXCAVATION OR PLANTING.

ROUGH GRADING

ROUGH GRADE AND FILL AREAS TO ESTABLISH SUBGRADE AS REQUIRED. PROVIDE DRAINAGE PATTERN AS INDICATED ON DRAWINGS. ROUND SMOOTHLY ALL TOPS AND TOES OF SLOPES. COMPACT ALL AREAS TO 95% STANDARD PROCTOR DENSITY UNLESS SPECIFIED OTHERWISE. EXISTING TREES TO REMAIN ON SITE ARE TO BE PROTECTED AS DETAILED.

FINE GRADING

FINE GRADE ALL AREAS TO FINISHED GRADES AS SHOWN ON LAYOUT OR GRADING PLAN OR ARCHITECT'S SITE PLAN. PROVIDE UNIFORM SLOPES AWAY FROM THE BUILDING, UNLESS SPECIFIED OTHERWISE. SLOPES MAY NOT EXCEED 33 1/3% (3:1).

SPREADING OF TOPSOIL

SCARIFY THE SUBSOIL PRIOR TO THE SPREADING THE TOPSOIL. REMOVE ALL DEBRIS AND LEAVE A FINE-TEXTURED EVEN SURFACE. ALL TOPSOIL TO BE IMPORTED UNLESS PREVIOUSLY APPROVED BY LANDSCAPE ARCHITECT. OBTAIN APPROVAL FOR THE QUALITY OF ANY IMPORTED TOPSOIL BEFORE DELIVERY TO THE SITE. TOPSOIL IS TO BE COMPACTED TO CREATE A FIRM AND EVEN SURFACE.

SOD

USE NO. 1 GRADE TURFGRASS NURSERY SOD WHICH CONFORMS WITH THE SPECIFICATIONS OF THE NURSERY SOD GROWERS ASSOCIATION OF ONTARIO. ALL LAWN AREAS SHALL RECEIVE A MINIMUM OF 100MM (4") OF COMPACTED TOPSOIL, AND SHALL BE SODDED WITH #1 KENTUCKY BLUEGRASS - FESCUE. NO SOD SLOPES ARE TO EXCEED 3:1. SLOPE IN EXCESS OF 4:1 TO BE PEGGED.

MINERAL FERTILIZER

APPLY THE FOLLOWING MINERAL FERTILIZER UNLESS SOILS TESTS SHOW OTHER REQUIREMENTS:

1. SODDED AREAS - 11% NITROGEN, 8% PHOSPHORUS AND 4% POTASH (11-8-4) AT THE RATE OF 4.5 KG OVER M2 (10 LBS OVER 1000 SQ. FT.).

2. PLANTING BEDS - 7% NITROGEN, 7% PHOSPHORUS AND 7% POTASH (7-7-7) AT THE RATE OF 40 GRAMS (4 OZ.) FOR EVERY BUSHEL OF TOPSOIL.

PREPARATION OF PLANTING BEDS

ALL PLANT BEDS TO BE CONTINUOUS. EXCAVATE ALL PLANTING BEDS TO THE DEPTH AS INDICATED ON THE DRAWINGS AND DETAILS, MIN 450mm(18"). BACKFILL ALL PLANTING BEDS WITH A SOIL MIXTURE CONSISTING OF SIX (6) PARTS OF SAND LOAM, ONE (1) PART OF FINELY PULVERIZED PEAT MOSS, TWO (2) PARTS OF WELL-ROTTED MANURE AND THE MINERAL FERTILIZER AS SPECIFIED ABOVE. ALSO ADD 58 KILOS BONEMEAL/CUBIC METER OF PLANTING SOIL (1 LB./CUBIC YARD). PREPARE THE PLANTING BEDS FOR PLANTING BEFORE THE DELIVERY OF THE PLANT MATERIAL TO THE JOB SITE.

NOTE: IF THE EXISTING SOIL CONDITIONS ARE CLAY OR WET IN NATURE, CONTACT THE LANDSCAPE ARCHITECT FOR INSTRUCTIONS OF A SUITABLE SOIL MIXTURE. FAILURE TO DO THIS MAY RESULT IN DELAY OF APPROVAL AND ACCEPTANCE.

PLANT MATERIALS

ALL PLANT MATERIAL SHALL CONFORM TO THE STANDARDS OF THE CANADIAN NURSERY TRADES ASSOCIATION FOR SIZE AND SPECIES.

ALL SHRUB AND TREE MATERIAL SHALL BE CONTAINER GROWN, POTTED, S/B OR B/B, UNLESS OTHERWISE NOTED. BARE ROOT PLANTING SHALL BE ACCEPTABLE FOR CERTAIN SPECIES DURING EARLY SPRING OR LATE FALL PLANTING SEASON. CONTRACTOR SHALL MAKE REQUESTS FOR ROOT CONDITION SUBSTITUTION IN WRITING TO THE LANDSCAPE ARCHITECT PRIOR TO COMMENCEMENT OF PLANTING OPERATIONS. ALL PLANT MATERIAL TO BE CLAY GROWN STOCK UNLESS OTHERWISE NOTED.

## LANDSCAPE SPECIFICATIONS

SCALE: N.T.S. DATE:

1 LD-01

REFER TO PLAN FOR LOCATION

PLANT MATERIAL INSTALLATION

ALL TREES, SHRUBS AND GROUNDCOVERS SHALL BE PLANTED AS DETAILED & AS SHOWN ON THE PLANTING PLAN. ALL BEDS TO RECEIVE A COVER OF CLEAN MULCH TO A DEPTH OF 75mm(3"). FOR GUYING AND STAKING TREES, REFER TO PLANTING DETAILS. WRAP ALL DECIDUOUS TREES UNDER EXPERIENCED SUPERVISION ONLY TO THE SPECIFICATIONS OF THE ONTARIO LANDSCAPE CONTRACTORS ASSOCIATION.

PLANT MATERIAL SIZES AND CONDITIONS ARE TO BE AS INDICATED ON THE LANDSCAPE DRAWING.

THE INDIVIDUAL PLANT GROUPING TOTAL AS ILLUSTRATED ON THE PLANTING PLAN SUPERSEDES THE ESTIMATED QUANTITY ON THE MASTER PLANT LIST. CONTRACTOR MUST REPORT ANY DISCREPANCIES TO THE LANDSCAPE ARCHITECT IN WRITING BEFORE COMMENCING ANY WORK. CONTRACTOR WILL ASSUME FULL RESPONSIBILITY IF LANDSCAPE ARCHITECT IS NOT NOTIFIED OF DISCREPANCIES.

* MULCH - SHREDDED PINE MULCH BY "GRO BARK" OR APPROVED EQUAL. LANDSCAPE ARCHITECT TO APPROVE MULCH BEFORE INSTALLATION.

GENERAL MAINTENANCE

PROPER MAINTENANCE PROCEDURES ARE TO BE FULLY ADMINISTERED FOR ALL NEWLY CONSTRUCTED LANDSCAPE WORK, IN ACCORDANCE WITH LANDSCAPE ONTARIO SPECIFICATIONS (SECTION 1E - MAINTENANCE WORK). THIS SHALL APPLY ONLY DURING THE CONSTRUCTION PERIOD, UNLESS OTHERWISE SPECIFIED. CONTRACTOR IS RESPONSIBLE FOR MAINTENANCE OF SOD AND PLANTING UNTIL FINAL ACCEPTANCE BY LANDSCAPE ARCHITECT.

RODENT PROTECTION

THE CONTRACTOR SHALL BE RESPONSIBLE FOR THE PROTECTION OF ALL TREES AND SHRUBS FOR WINTER PROTECTION AND FROM RODENT INJURY FOR THE DURATION OF GUARANTY PERIOD. PROTECTIVE GUARDS SHALL BE EMPLOYED AROUND ALL DECIDUOUS TREES. GUARDS TO BE 150MM DIA. PVC PIPE OR AS MUNICIPAL GUIDELINES. GUARDS SHALL BE INSTALLED PRIOR TO THE APPLICATION OF THE MULCH AND SHOULD BE PLACED A MINIMUM OF 50MM (2") OUT FROM THE TREE TRUNK ON ALL SIDES.

ALL SHRUBS AND CONIFEROUS TREES SHALL HAVE AN APPLICATION OF "SKOOT" OR APPROVED EQUIVALENT RODENT FORMULA, TO BE APPLIED AT THE END OF OCTOBER. FOLLOW MANUFACTURER'S DIRECTIONS FOR APPLICATION.

GENERAL REQUIREMENTS

USE ABOVE SPECIFICATIONS IN CONJUNCTION WITH THE GENERAL LANDSCAPE SPECIFICATIONS OF THE ONTARIO LANDSCAPE CONTRACTORS ASSOCIATION, THE NURSERY SOD GROWERS ASSOCIATION OF ONTARIO AND WITH THE GUIDE SPECIFICATIONS FOR NURSERY STOCK OF THE CANADIAN NURSERY TRADES ASSOCIATION. USE ONLY PLANT MATERIAL TRUE TO NAME, SIZE AND GRADE AS SPECIFIED ON PLANTING PLAN. PROVIDE SUFFICIENT LABELS OR MARKINGS TO INDICATE CLEARLY THE VARIETY, SIZE AND GRADE OF EACH SPECIMEN OR BUNDLE.

OBTAIN APPROVAL FOR SUBSTITUTIONS AS TO VARIETY, SIZE OR GRADE FROM THE LANDSCAPE ARCHITECT. USE ONLY NURSERY STOCK GROWN UNDER PROPER HORTICULTURAL PRACTICES, VIABLE, FREE FROM PEST AND DISEASE AND UNDAMAGED. CHECK LOCATIONS AND OBTAIN STAKEOUTS OF ALL UTILITY LINES BEFORE EXCAVATION. OBTAIN ALL NECESSARY PERMITS BEFORE COMMENCEMENT OF CONSTRUCTION. REPORT IN WRITING ANY DISCREPANCIES IN THE DRAWINGS, SPECIFICATIONS AND CONTRACT DOCUMENTS TO THE LANDSCAPE ARCHITECT BEFORE THE END OF THE BIDDING PROCESS AND COMMENCEMENT OF CONSTRUCTION. THESE SPECIFICATIONS MAY BE SUPERCEDED BY ADDITIONAL SPECIFICATIONS SET OUT IN THE TENDER DOCUMENTS. CONTRACTOR TO REVIEW ALL DOCUMENTS.

GUARANTEE PERIOD

PROVIDE ONE FULL YEAR GUARANTEE ON ALL LANDSCAPE WORK FROM DATE OF FINAL ACCEPTANCE BY LANDSCAPE ARCHITECT. GUARANTEE PERIOD MAY BE EXTENDED TO TWO FULL YEARS DEPENDING ON MUNICIPAL STANDARDS. CONTRACTOR TO VERIFY WITH OWNER AND LANDSCAPE ARCHITECT.

## PLANT MATERIAL INSTALLATION

SCALE: N.T.S. DATE:

2 LD-01

REFER TO PLAN FOR LOCATION

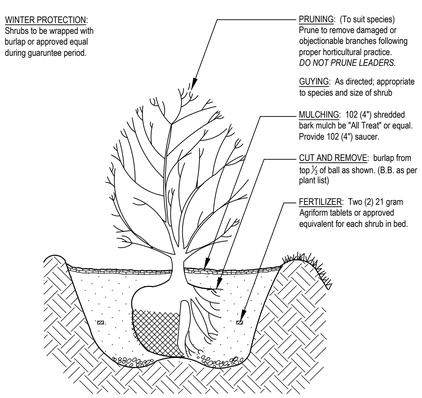


PLANTING SOIL MIXTURE: (Mix thoroughly)
A. For ideal situations mix:
- 6 parts good quality topsoil
- 2 parts well rotted cow manure
- 1 part peat moss

B. For clay or wet situations:
- Contact consultants for proper soil mixture, before proceeding with work

C. Add 0.58 kg (1 lb) of bonemeal per cubic yard of soil
D. Soil mixture should be firmly compacted to eliminate air pockets and prevent settlement.

PREPARATION OF BED: Excavate shrub bed to size outlined on drawings, minimum 457 (18") depth. Remove any subsoil or rubbish off site unless otherwise directed.

SPACING: As directed.

FOR RODENT CONTROL: See landscape specifications or apply "Skoot" at the end of October. Note: All tree stakes, ties and guards are to be removed one year after installation by the landscape contractor.

## STANDARD SHRUB PLANTING DETAIL

SCALE: N.T.S. DATE:

3 LD-01

REFER TO PLAN FOR LOCATION

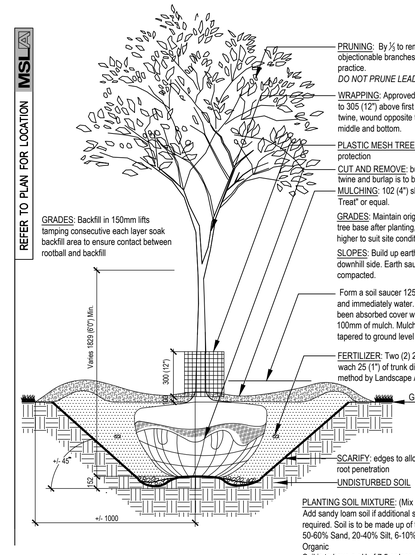


## STANDARD DECIDUOUS TREE DETAIL

DERIVED FROM– CITY OF TORONTO – URBAN FORESTRY SERVICE (DETAIL PD–101)

4 LD-01

REFER TO PLAN FOR LOCATION

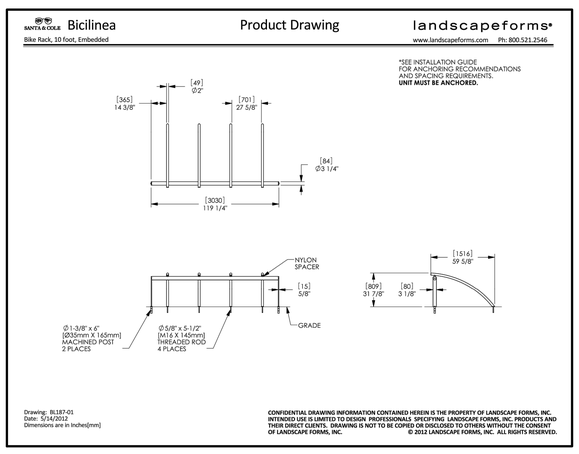


## BICILINEA 10 FOOT BIKE RACK - BY LANDSCAPEFORMS

SCALE: N.T.S.

5 LD-01

REFER TO PLAN FOR LOCATION

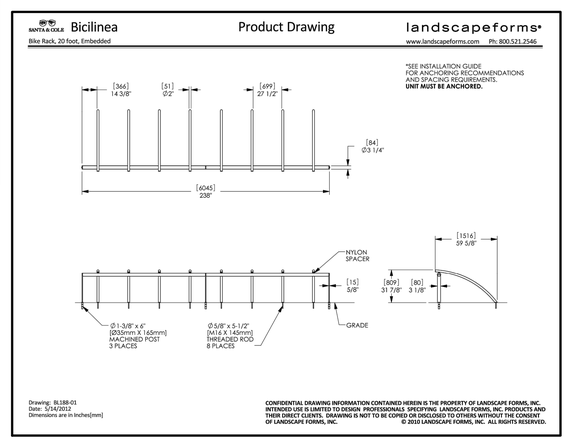


## BICILINEA 20 FOOT BIKE RACK - BY LANDSCAPEFORMS

SCALE: N.T.S. DATE:

6 LD-01

REFER TO PLAN FOR LOCATION

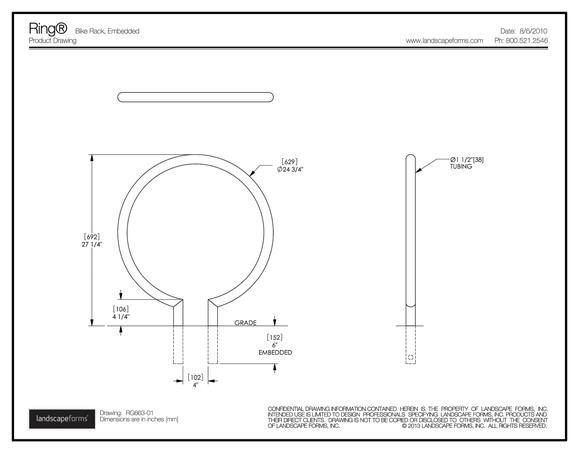


## BIKE RING - BY LANDSCAPEFORMS

SCALE: N.T.S.

7 LD-01

*"The Owner shall de-compact the planting areas of the site and the street allowance as preparation for planting by excavating 100-120cm (or the depth of the proposed soil volume calculation) of the existing soil, scarify the open faces and bottom, and replace with new top soil, (City standard soil requirements) prior to tree planting. The Owner shall further provide proof (photos) of the planting preparation process indicating all stages in accordance with the approved Site Plan, Landscape Plan, Planting Details and Toronto Standard Details, and any other plans which are connected with the tree planting process."*


msla
MARTON SMITH LANDSCAPE ARCHITECTS
170 The Donway W Suite 206.
Toronto, Ontario, Canada. M3C 2G3
tel. 416.492.9966 | email. info@msla.ca


Architect:

SvN

Client/Owner:

Municipality:

TORONTO

Notes:

| No. | Revision | Date |
|---|---|---|
| 03 | Re Issued for ZBA submission | 06/23/20 |
| 02 | Issued for Review | 06/10/20 |
| 01 | Issued for ZBA submission | 02/19/20 |

North: Stamp:

ONTARIO ASSOCIATION OF LANDSCAPE ARCHITECTS — MEMBER

Project:

**Proposed Mixed Use 12 storey Building**
3458 - 3471 Sheppard Avenue East
Toronto, Ontario

Scale: **As Shown** Date: **January 2020**

Drawn By: **J.B.** Checked By: **L.M.**

Drawing Title:

**Landscape Details**

Project No. **20106** Sheet No. **LD-01**


All information contained in these plans shall be checked by the contractor. All discrepancies shall be reported to the Landscape Architect (L.A.) before commencing with construction. All drawings have copyright and shall remain the property of the Landscape Architect. Copying or any reproduction in part or whole shall only be permitted with written consent of L. A. Drawings shall not be used for construction unless sealed & SIGNED. All drainage patterns must clear positively away from buildings or structures at 2% min. The position of existing above ground and underground utilities and facilities are not necessarily shown on the drawings, and where shown, the accuracy of the position of utilities or facilities is not guaranteed. Before starting work, the contractor shall confirm the exact location of all existing utilities and facilities, and shall assume liability for damages. WRITTEN DIMENSIONS ON DRAWINGS SHALL BE ADHERED TO. DRAWINGS NOT TO BE SCALED. ALL WORK TO COMPLY WITH THE LATEST EDITION OF THE ONTARIO BUILDING CODE AND ALL OTHER APPLICABLE BUILDING CODES AND LOCAL MUNICIPAL BY-LAWS. ALL MATERIALS AND WORKMANSHIP TO BE IN ACCORDANCE WITH ONTARIO PROVINCIAL STANDARD SPECIFICATIONS UNLESS OTHERWISE NOTED. DO NOT SCALE DRAWINGS • PRELIMINARY NOT FOR CONSTRUCTION • THESE DRAWINGS ARE NOT TO BE USED FOR CONSTRUCTION UNTIL COUNTERSIGNED BY L. ARCHITECT •
SIGNED DATE

REFER TO PLAN FOR LOCATION MSLA

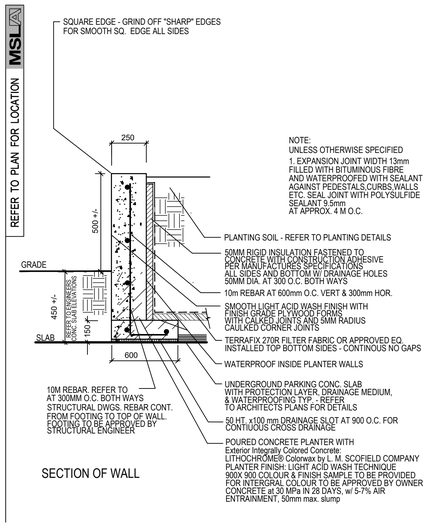


500mm HT. INTERGRAL COLOUR CONC. PLANTER 8

SCALE: N.T.S. DWTE:CONCRETE SLAB DETAIL LD-02

REFER TO PLAN FOR LOCATION MSLA

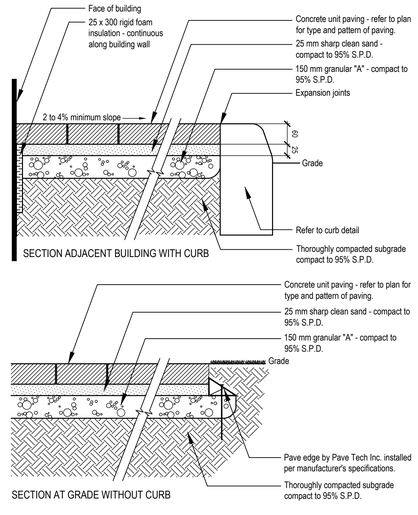


PRECAST CONCRETE PAVER INSTALLATION DETAIL 9

SCALE: N.T.S. SINGLE SOLDIER COURSE OPTION LD-02

REFER TO PLAN FOR LOCATION MSLA

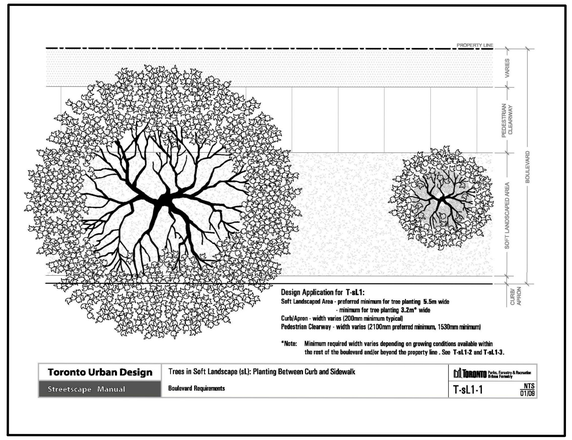


TREES IN SOFT LANDSCAPE - (TSL1-1) 10

LD-02

REFER TO PLAN FOR LOCATION MSLA

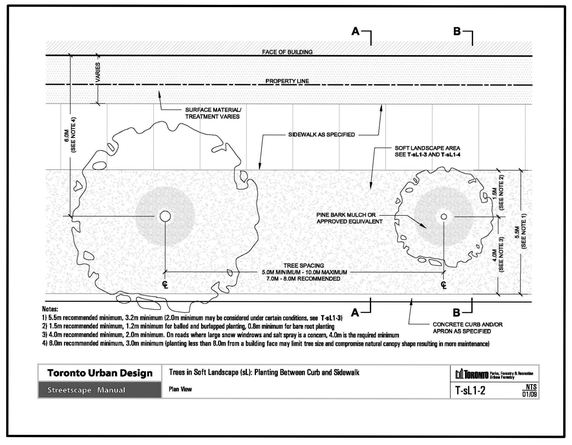


TREES IN SOFT LANDSCAPE - (TSL1-2) 11

LD-02

REFER TO PLAN FOR LOCATION MSLA

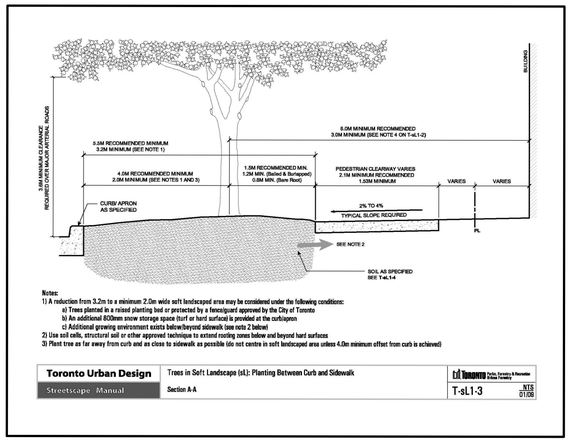


TREES IN SOFT LANDSCAPE - (TSL1-3) 12

LD-02

REFER TO PLAN FOR LOCATION MSLA

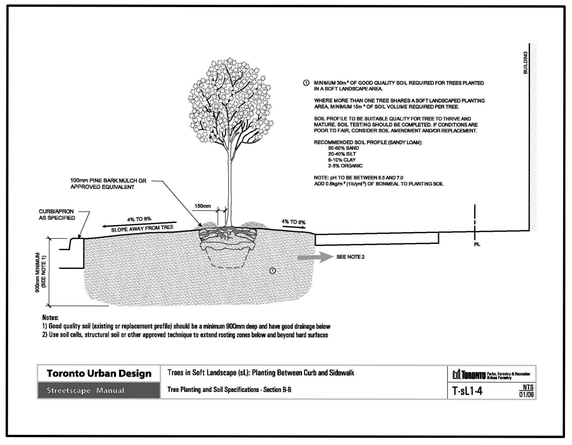


TREES IN SOFT LANDSCAPE - (TSL1-4) 13

LD-02

*"The Owner shall de-compact the planting areas of the site and the street allowance as preparation for planting by excavating 100-120cm (or the depth of the proposed soil volume calculation) of the existing soil, scarify the open faces and bottom, and replace with new top soil, (City standard soil requirements) prior to tree planting. The Owner shall further provide proof (photos) of the planting preparation process indicating all stages in accordance with the approved Site Plan, Landscape Plan, Planting Details and Toronto Standard Details, and any other plans which are connected with the tree planting process."*


msla
MARTON SMITH LANDSCAPE ARCHITECTS
170 The Donway W Suite 206.
Toronto, Ontario, Canada. M3C 2G3
tel. 416.492.9966 | email. info@msla.ca


Architect:

SvN

Client/Owner:

Municipality:

TORONTO

Notes:

| No. | Revision | Date |
|---|---|---|
| 03 | Re Issued for ZBA submission | 06/23/20 |
| 02 | Issued for Review | 06/10/20 |
| 01 | Issued for ZBA submission | 02/19/20 |

North: Stamp:

ASSOCIATION OF LANDSCAPE ARCHITECTS ONTARIO MEMBER

Project:

**Proposed Mixed Use 12 storey Building**
3458 - 3471 Sheppard Avenue East
Toronto, Ontario

Scale: **As Shown** Date: **January 2020**

Drawn By: **J.B.** Checked By: **L.M.**

Drawing Title:

**Landscape Details**

Project No. **19195** Sheet No. **LD-02**


All information contained in these plans shall be checked by the contractor. All discrepancies shall be reported to the Landscape Architect (L.A.) before commencing with construction. All drawings have copyright and shall remain the property of the Landscape Architect. Copying or any reproduction in part or whole shall only be permitted with written consent of L. A. Drawings shall not be used for construction unless sealed & SIGNED. All drainage patterns must drain positively away from buildings or structures at 2% min. The position of existing above ground and underground utilities are not necessarily shown on this drawings, and where shown, the accuracy of the position of utilities or facilities is not guaranteed. Before starting work, the contractor shall confirm the exact location of all existing utilities and facilities, and shall assume liability for damages. ALL WORK TO BE PERFORMED AND MATERIALS TO BE SUPPLIED IN ACCORDANCE WITH THE ONTARIO PROVINCIAL STANDARDS AND ALL REFERENCED MUNICIPAL STANDARDS UNLESS OTHERWISE SPECIFIED. DO NOT SCALE DRAWINGS • PRELIMINARY NOT FOR CONSTRUCTION • THESE DRAWINGS ARE NOT TO BE USED FOR CONSTRUCTION UNTIL COUNTERSIGNED BY L. ARCHITECT •
DATE SIGNED

REFER TO PLAN FOR LOCATION MSLA

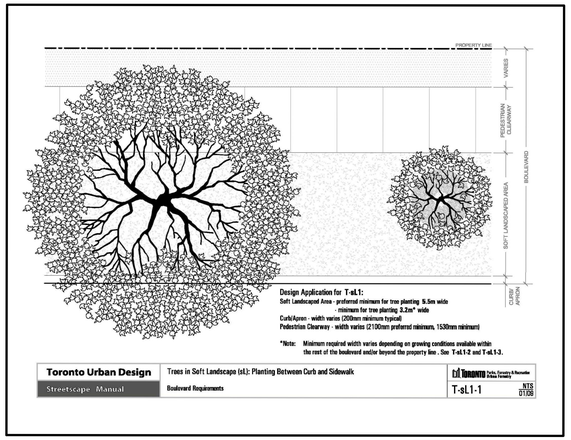


TREES IN SOFT LANDSCAPE - (TSL2-1) 14 LD-03

REFER TO PLAN FOR LOCATION MSLA

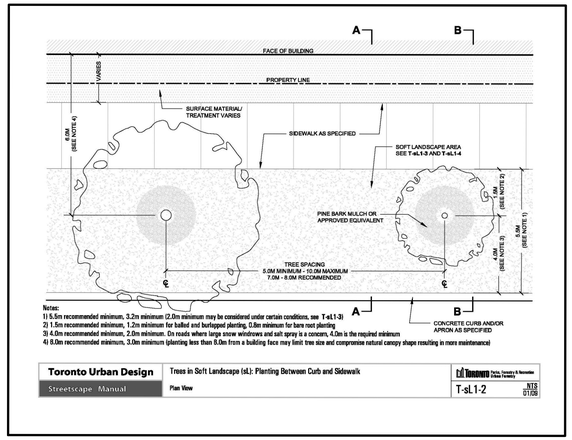


TREES IN SOFT LANDSCAPE - (TSL2-2) 15 LD-03

REFER TO PLAN FOR LOCATION MSLA

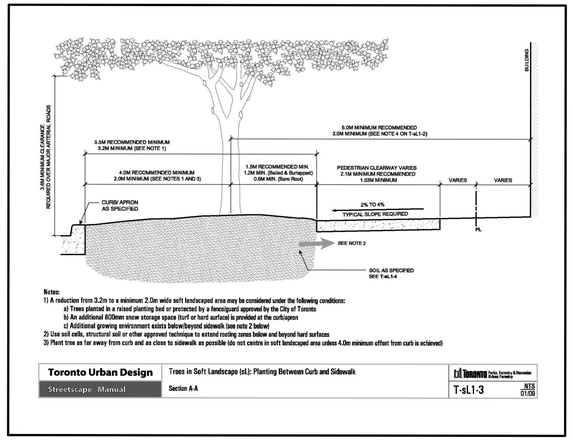


TREES IN SOFT LANDSCAPE - (TSL2-3) 16 LD-03

REFER TO PLAN FOR LOCATION MSLA

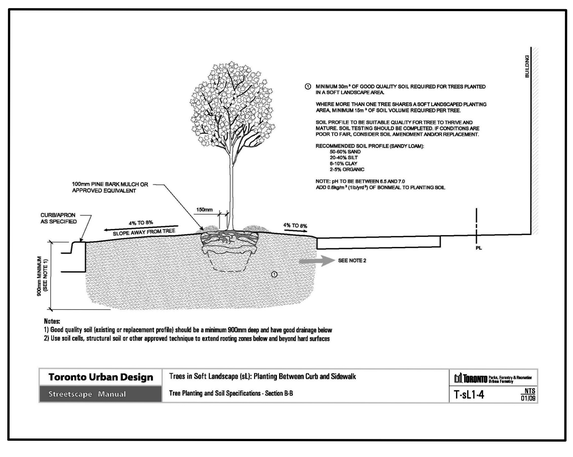


TREES IN SOFT LANDSCAPE - (TSL2-4) 17 LD-03

REFER TO PLAN FOR LOCATION MSLA

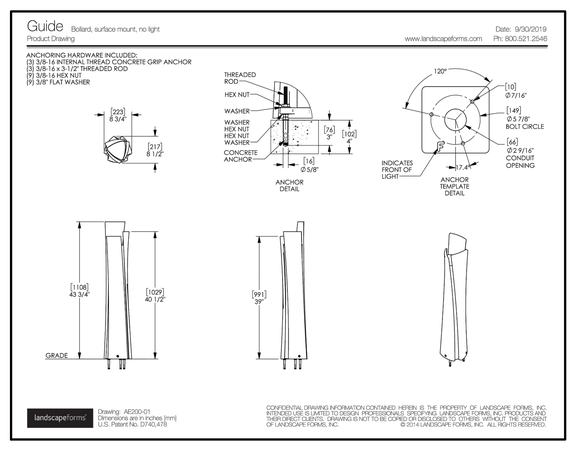


GUIDE BOLLARD - BY LANDSCAPEFORMS 18 LD-03

REFER TO PLAN FOR LOCATION MSLA

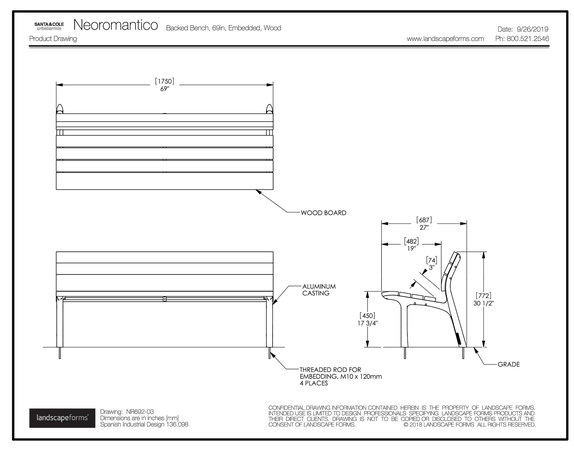


NECROMANTICO BACKED BENCH - BY LANDSCAPEFORMS 19 LD-03

*"The Owner shall de-compact the planting areas of the site and the street allowance as preparation for planting by excavating 100-120cm (or the depth of the proposed soil volume calculation) of the existing soil, scarify the open faces and bottom, and replace with new top soil, (City standard soil requirements) prior to tree planting. The Owner shall further provide proof (photos) of the planting preparation process indicating all stages in accordance with the approved Site Plan, Landscape Plan, Planting Details and Toronto Standard Details, and any other plans which are connected with the tree planting process."*


msla
MARTON SMITH LANDSCAPE ARCHITECTS
170 The Donway W Suite 206.
Toronto, Ontario, Canada. M3C 2G3
tel. 416.492.9966 | email. info@msla.ca


Architect:

SvN

Client/Owner:

Municipality:

TORONTO

Notes:

| No. | Revision | Date |
|---|---|---|
| 03 | Re Issued for ZBA submission | 06/23/20 |
| 02 | Issued for Review | 06/10/20 |
| 01 | Issued for ZBA submission | 02/19/20 |

North: Stamp:

ONTARIO ASSOCIATION OF LANDSCAPE ARCHITECTS
OALA
MEMBER

Project:

**Proposed Mixed Use 12 storey Building**
3458 - 3471 Sheppard Avenue East
Toronto, Ontario

Scale: **As Shown** Date: **January 2020**

Drawn By: **J.B.** Checked By: **L.M.**

Drawing Title:

**Landscape Details**

Project No. **19195** Sheet No. **LD-03**


All information contained in these plans shall be checked by the contractor. All discrepancies shall be reported to the Landscape Architect (L.A.) before commencing with construction. All drawings have copyright and shall remain the property of the Landscape Architect. Copying or any reproduction in part or whole shall only be permitted with written consent of L. A. Drawings shall not be used for construction unless sealed & SIGNED. All Drainage patterns must drain positively away from buildings or structures at 2% min. The position of existing above ground and underground utilities and facilities are not necessarily shown on this drawings, and where shown, the accuracy of the position of utilities or facilities is not guaranteed. Before starting work, the contractor shall confirm the exact location of all existing utilities and facilities, and shall assume liability for damages. DO NOT SCALE DRAWINGS • PRELIMINARY NOT FOR CONSTRUCTION • THESE DRAWINGS ARE NOT TO BE USED FOR CONSTRUCTION UNTIL COUNTERSIGNED BY L. ARCHITECT • DATE SIGNED

REFER TO PLAN FOR LOCATION MSLA

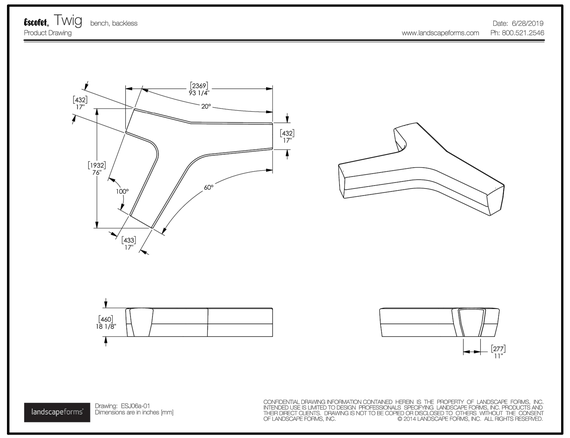


TWIG BACKLESS BENCH - BY LANDSCAPEFORMS

20
LD-04

REFER TO PLAN FOR LOCATION MSLA

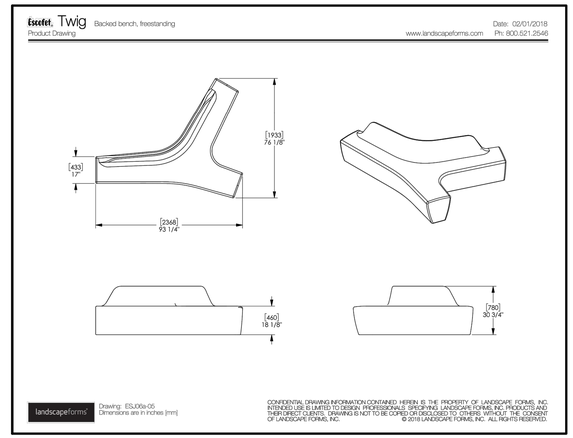


TWIG BACKED BENCH - BY LANDSCAPEFORMS

21
LD-04

*"The Owner shall de-compact the planting areas of the site and the street allowance as preparation for planting by excavating 100-120cm (or the depth of the proposed soil volume calculation) of the existing soil, scarify the open faces and bottom, and replace with new top soil, (City standard soil requirements) prior to tree planting. The Owner shall further provide proof (photos) of the planting preparation process indicating all stages in accordance with the approved Site Plan, Landscape Plan, Planting Details and Toronto Standard Details, and any other plans which are connected with the tree planting process."*


msla
MARTON SMITH LANDSCAPE ARCHITECTS
170 The Donway W Suite 206.
Toronto, Ontario, Canada. M3C 2G3
tel. 416.492.9966 | email. info@msla.ca


Architect:
SvN

Client/Owner:

Municipality:
TORONTO

Notes:

| No. | Revision | Date |
|---|---|---|
| 01 | Issued for Review | 07/01/20 |

North:

Stamp:
ASSOCIATION OF LANDSCAPE ARCHITECTS ONTARIO
OALA
MEMBER

Project:
**Proposed Mixed Use 12 storey Building**
3458 - 3471 Sheppard Avenue East
Toronto, Ontario

Scale: **As Shown** Date: **January 2020**

Drawn By: **J.B.** Checked By: **L.M.**

Drawing Title:
**Landscape Details**

Project No. **19195**
Sheet No. **LD-04**


All information contained in these plans shall be checked by the contractor. All discrepancies shall be reported to the Landscape Architect (L.A.) before commencing with construction. All drawings have copyright and shall remain the property of the Landscape Architect. Copying or any reproduction in part or whole shall only be permitted with written consent of L. A. Drawings shall not be used for construction unless sealed & SIGNED.
All drawings patterns must clear positively away from buildings or structures at 2% min. The position of existing above ground and underground utilities and facilities are not necessarily shown on the drawings, and where shown, the accuracy of the position of utilities or facilities is not guaranteed. Before starting work, the contractor shall confirm the exact location of all existing utilities and facilities, and shall assume liability for damages.
WARNING: THESE DRAWINGS ARE NOT CONSIDERED TO BE CONSTRUCTION DOCUMENTS UNTIL THEY ARE SIGNED AND SEALED BY THE LANDSCAPE ARCHITECT. ALL REVISIONS MUST BE APPROVED BY THE CONSULTANT & COMPETENT PROFESSIONAL ENGINEER PRIOR TO CONSTRUCTION ♦ ♦ ♦

REFER TO PLAN FOR LOCATION

Xeroflor®

Locally Distributed By:

Next Level Storm Water Management

One Yonge St., Ste 1801
Toronto, ON, Canada.
M5E 1W7
416 637 5772 tel
www.nlsm.ca

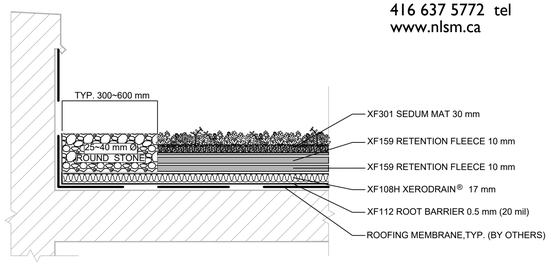


1 DET — XF301 Sedum Standard Stone Edge Detail
Conventional Roofing Assembly

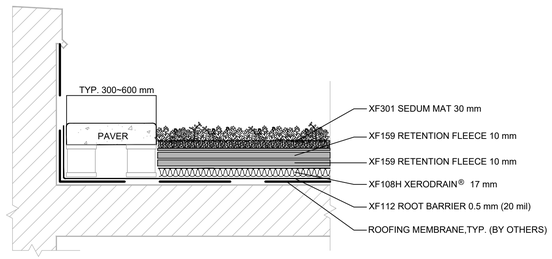


2 DET — XF301 Sedum Standard Paver Edge Detail
Conventional Roofing Assembly

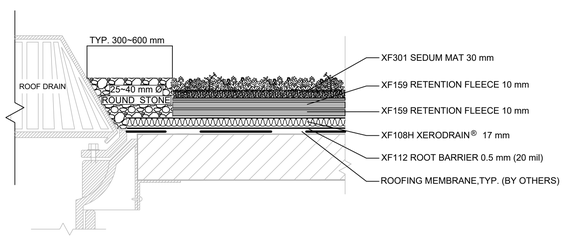


3 DET — XF301 Sedum Standard Drain Detail
Conventional Roofing Assembly

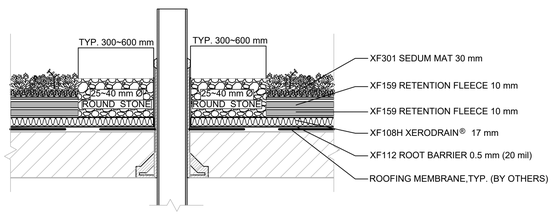


4 DET — XF301 Sedum Standard Penetration Detail
Conventional Roofing Assembly

## XF301 Pre-cultivated Green Roof System:

(Plant Material Selection information as provided by XeroFlor Canada Inc.)

The XF301 Sedum mat contains a mix of 8-12 species that have a high water-storing ability and a high tolerance to heat and drought. In nature, they are found in well-draining shallow soils and survive with low amounts of rain water. These characteristics make sedum ideal not just for harsh roof climates but more importantly for thin layered vegetated roofing systems. Access to a hose bib for watering the plants during periods of drought is sufficient for their survival and well-being.
The XF301 pre-grown mat consist of a mix of evergreen and deciduous sedum allowing there to be interest around all year around. While there are few “native” sedums in North America, the sedums used by Xeroflor can be considered “native adaptive” as they were introduced to NA centuries ago and are now found widely across Canada. Sedums are not considered “noxious weeds” as defined by the Ontario Regulation 1096 under the Weed Control Act. The vegetation mats are delivered with a 80% vegetation coverage and achieve a minimum of 90% coverage after the 12th month following installation – two years earlier than the coverage timeline requirement set out in the Toronto Municipal Code Chapter 492-9.

Species:

Sedum acre
Sedum spurium ‘Summer Glory’
Sedum floriferum
Sedum album
Sedum reflexum rupestre
Sedum stoloniferum
Sedum sexangulare
Sedum pulchellum
Sedum stenopetalum
Sedum ellacombianum
Sedum spurium var. coccineum
Sedum kamschaticum

## Note:

Refer to Plant Material Selection information and
Plant Survivability Report prepared for 27 Fasken Drive by,
Karen K.Y. Liu, Ph.D.
Director of Research and Development – North America
Bonar Xeroflor GmbH
1162 – 11th Avenue East
Vancouver, BC
Canada V5T 2G3

# GREEN ROOF SYSTEM: XF301 STD. BY XEROFLOR

SCALE: N.T.S. DATE:

26
LD-05


msla
MARTON SMITH LANDSCAPE ARCHITECTS
170 The Donway W Suite 206.
Toronto, Ontario, Canada. M3C 2G3
tel. 416.492.9966 | email. info@msla.ca


Architect:
SvN

Client/Owner:

Municipality:
TORONTO

Notes:

| No. | Revision | Date |
|---|---|---|
| 01 | Issued for Review | 07/01/20 |

North:

Stamp:
ONTARIO ASSOCIATION OF LANDSCAPE ARCHITECTS — OALA — MEMBER

Project:
**Proposed Mixed Use 12 storey Building**
3458 - 3471 Sheppard Avenue East
Toronto, Ontario

Scale: **As Shown** Date: **January 2020**
Drawn By: **J.B.** Checked By: **L.M.**

Drawing Title:
**Landscape Details**

Project No. **19195** Sheet No. **LD-05**


All information contained in these plans shall be checked by the contractor. All discrepancies shall be reported to the Landscape Architect (L.A.) before commencing with construction. All drawings have copyright and shall remain the property of the Landscape Architect. Copying or any reproduction in part or whole shall only be permitted with written consent of L. A. Drawings shall not be used for construction unless sealed & SIGNED.
All drainage patterns must drain positively away from buildings or structures at 2% min. The position of existing above ground and underground utilities and facilities are not necessarily shown on this drawing, and where shown, the accuracy of the position of utilities or facilities is not guaranteed. Before starting work, the contractor shall confirm the exact location of all existing utilities and facilities, and shall assume liability for damages.
NOTE: ALL WORK TO BE CARRIED OUT IN ACCORDANCE WITH THE ONTARIO BUILDING CODE AND ALL APPLICABLE LOCAL BYLAWS AND REGULATIONS.
DO NOT SCALE DRAWINGS • PRELIMINARY NOT FOR CONSTRUCTION • THESE DRAWINGS ARE NOT TO BE USED FOR CONSTRUCTION UNTIL COUNTERSIGNED BY L. ARCHITECT • SIGNED ____ DATE ____